GMEPPA9150 (#ARZ86327R) Electric Pneumatic Handle

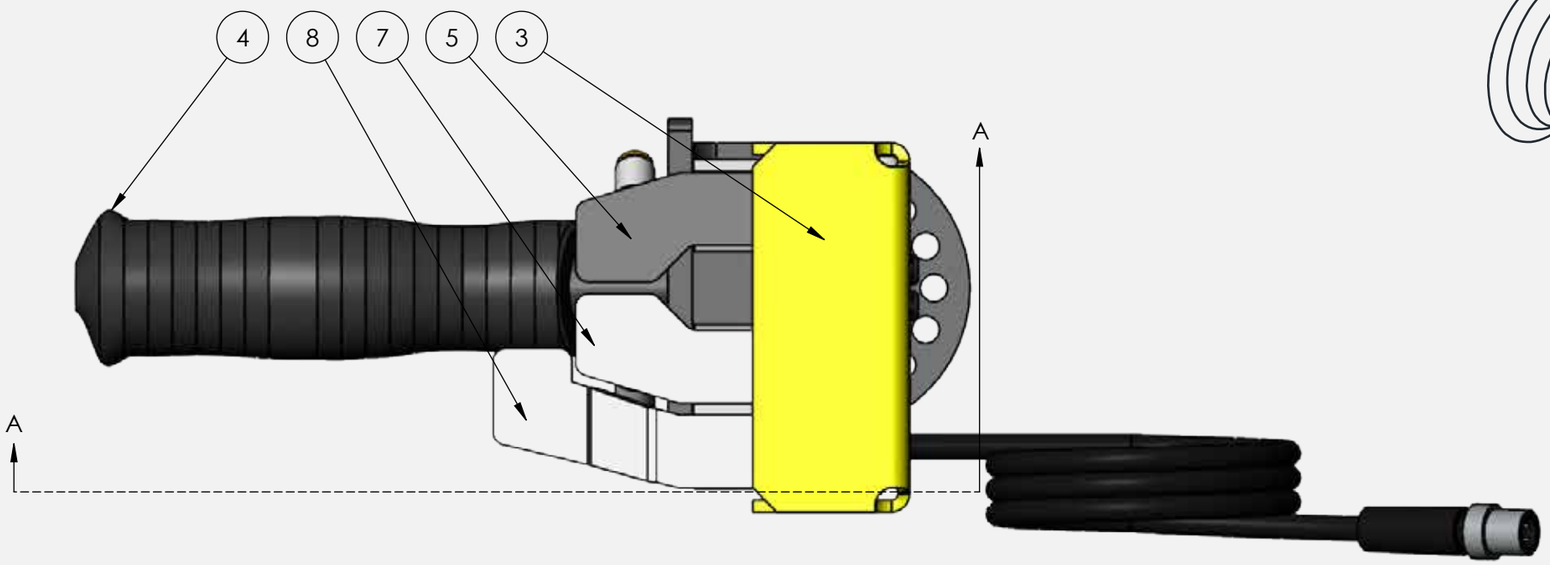

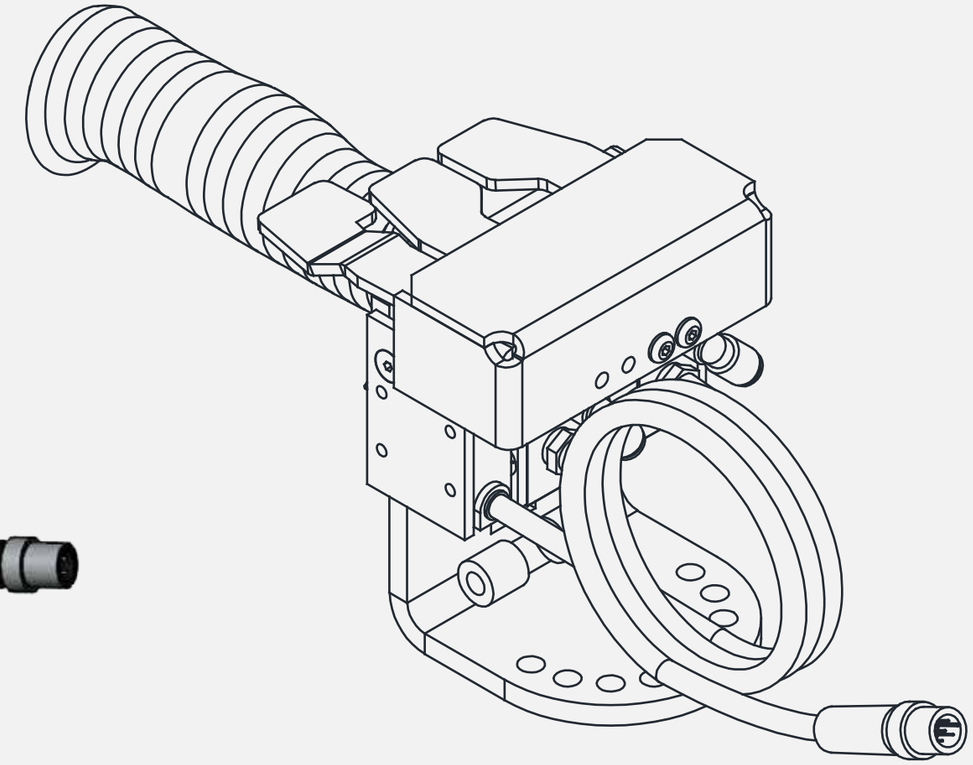

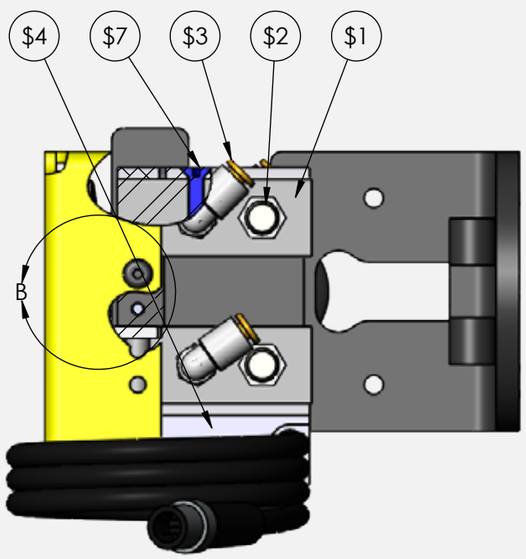

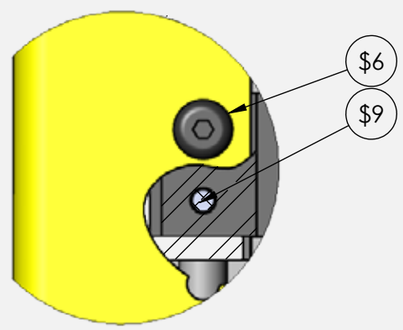

VIEW B
SCALE 2 : 1

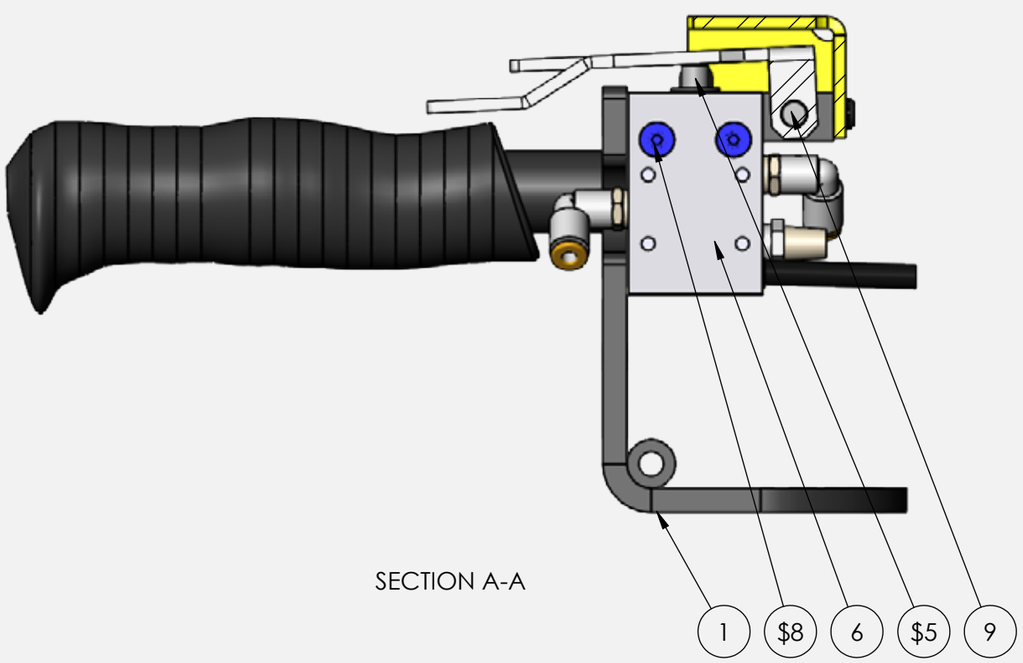

SECTION A-A

Ref #	Qty #		Knight Part #	ARZ Part #	Description
$9	2		9613K14	ARZ86266	5/32” NYLON BALLS
$8	2		#8-32 X 7/8” LG	N/A	FHCS
$7	4		#8-32 X 1 1/4” LG	N/A	FHCS
$6	2		#8-32 X 3/8 LG	N/A	BHCS
$5	1		ZCE10	ARZ86278	TELEMECANIQUE SWITCH HEAD
$4	1		ZCMD21L1R12SCU	ARZ86279	TELEMECANIQUE 4 PIN SWITCH
$3	4		KQ2L04-01S	ARZ86265	MALE ELBOW 4mm OD1/8 NPT
$2	2		P18	ARZ86264	NEUMATICS MUFFLER 1/8 NPT
$1	2		VM430-F01-00	ARZ86263	SMC VALVE
9	1		GMBPD1113-3.5	ARZ86274	LEVER PIN
8	1		GMBPD1106	ARZ86270	RIGHT HAND OUTER LEVER
7	1		GMBPD1104	ARZ86261	RIGHT HAND INNER LEVER
6	1		GMBPD1103	ARZ86280	ELECTRIC BLOCK SPACER
5	1		GMBPD1105	ARZ86267	LEFT HAND INNER LEVER
4	1		BPD1125	ARZ86260	7/8” DIA MOLDED ERGO GRIP
3	1		GMBPD1111	ARZ86275	3 BUTTON GUARD
2	2		GMBPD1102	ARZ86257	PNEUMATIC SPACER
1	1		GMBPD1100	ARZ86256	HANDLE BRACKET

KNIGHT GLOBAL

Information is this Bill of Materials is accurate at the time of posting. Please contact a Knight Representative to verify product information.