GMEPPTA9640 (#ARZ86307R) Pneumatic-Electric Handle with Pneumatic Trigger

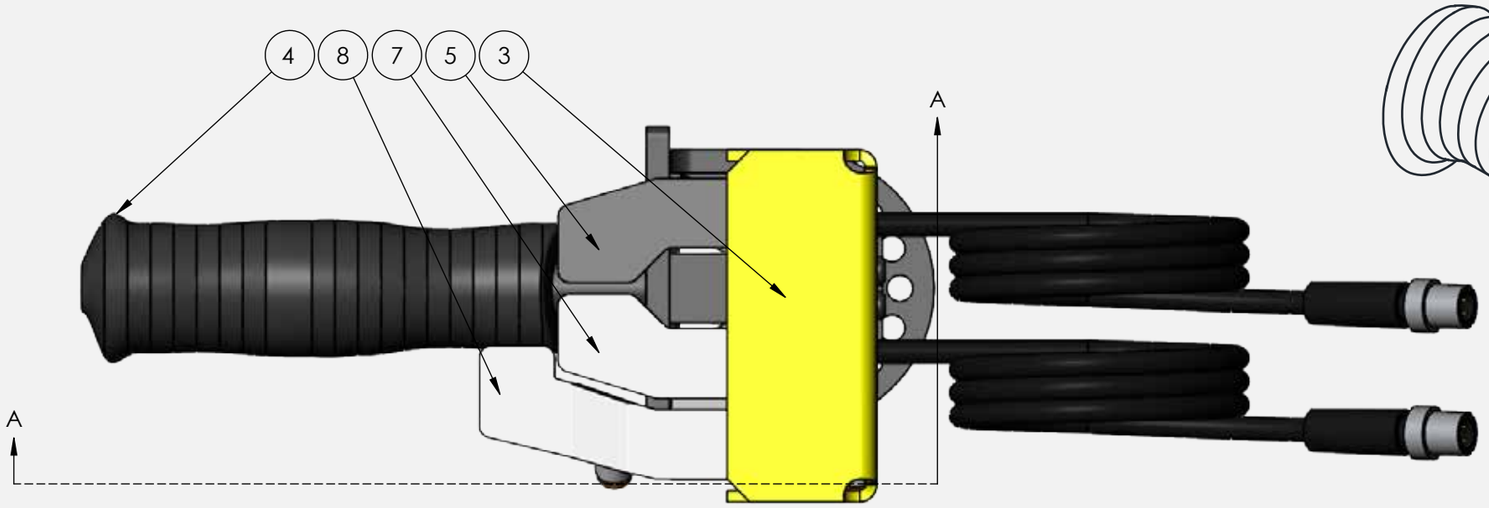

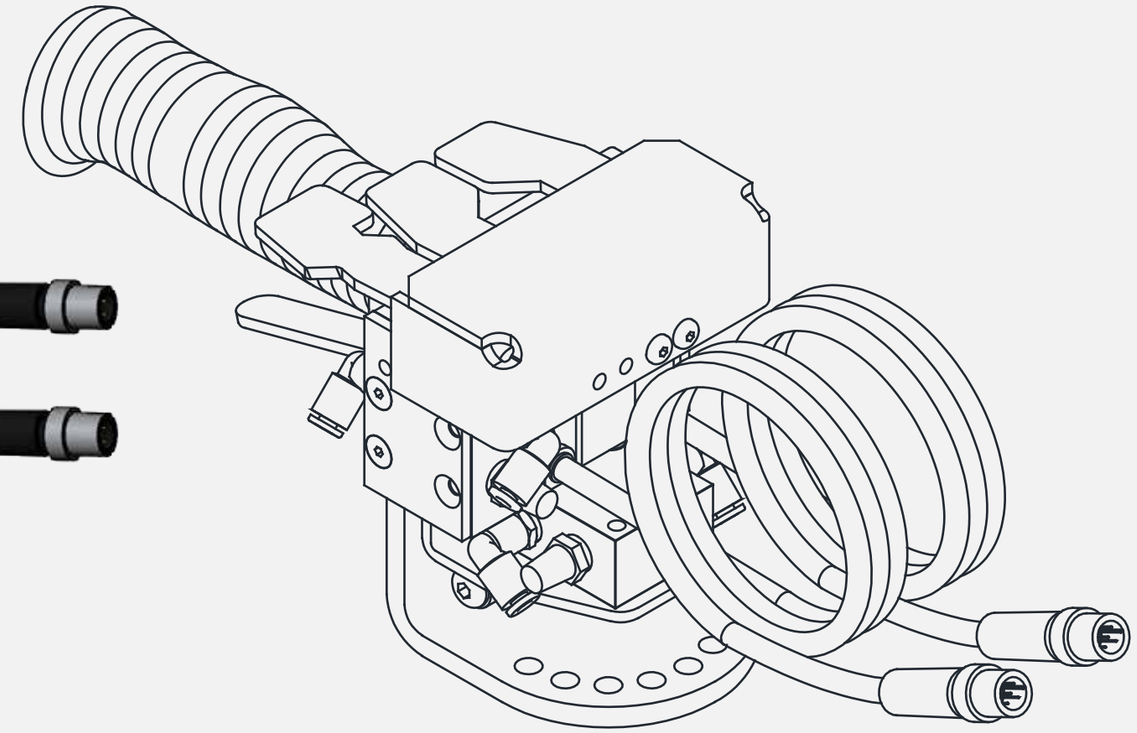

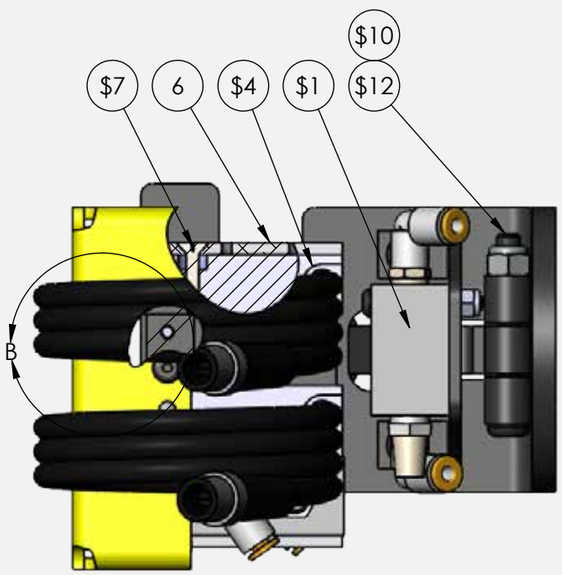

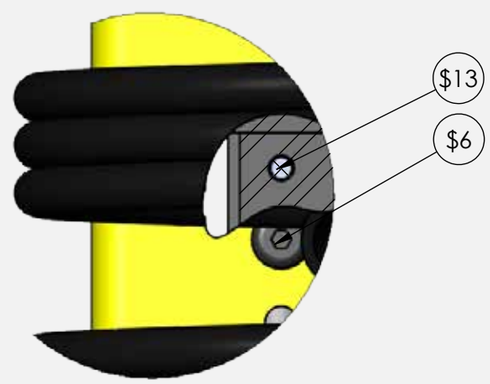

VIEW B
SCALE 2 : 1

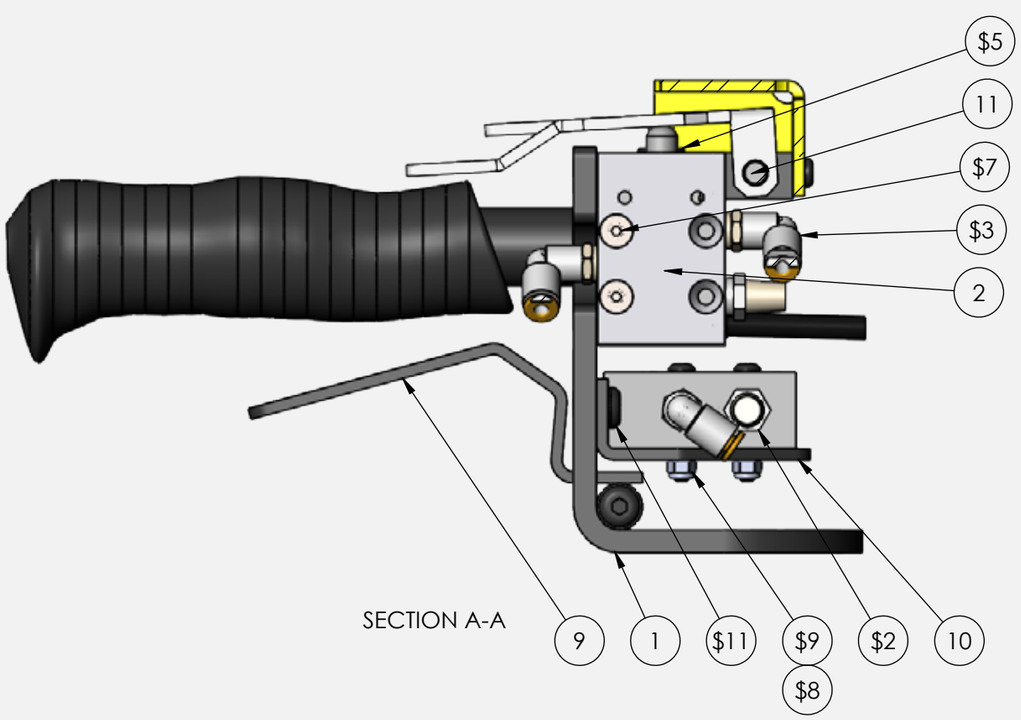

SECTION A-A

Ref #	Qty #		Knight Part #	ARZ Part #	Description
$13	2		9613K14	ARZ86266	5/32" NYLON BALLS
$12	1		1/4-20 X 2" LG	N/A	BHCS
$11	2		1/4-20 X 3/8 LG	N/A	BHCS
$10	1		1/4-20	N/A	NYLOK NUT
$9	2		M4	N/A	NYLOK NUT
$8	2		M4X0.7 x 30	N/A	BHCS
$7	6		#8-32 X 1" LG	N/A	FHCS
$6	2		#8-32 X 3/8 LG	N/A	BHCS
$5	2		ZCE10	ARZ86278	TELEMECANIQUE SWITCH HEAD
$4	2		ZCMD21L1R12SCU	ARZ86279	TELEMECANIQUE 4 PIN SWITCH
$3	4		KQ2L04-01S	ARZ86265	MALE ELBOW 4mm OD1/8 NPT
$2	2		P18	ARZ86264	NEUMATICS MUFFLER 1/8 NPT
$1	2		VM430-F01-00	ARZ86263	SMC VALVE
11	1		GMBPD1113-3.5	ARZ86274	LEVER PIN
10	1		GMBPD1109	ARZ86276	TRIGGER VALVE MNT. BRACKET
9	1		GMBPD1108	ARZ86277	TRIGGER LEVER
8	1		GMBPD1106	ARZ86270	RIGHT HAND OUTER LEVER
7	1		GMBPD1104	ARZ86261	RIGHT HAND INNER LEVER
6	2		GMBPD1103	ARZ86280	ELECTRIC BLOCK SPACER
5	1		GMBPD1105	ARZ86267	LEFT HAND INNER LEVER
4	1		BPD1125	ARZ86260	7/8" DIA MOLDED ERGO GRIP
3	1		GMBPD1111	ARZ86275	3 BUTTON GUARD
2	1		GMBPD1102	ARZ86257	PNEUMATIC SPACER
1	1		GMBPD1100	ARZ86256	HANDLE BRACKET

KNIGHT GLOBAL

Information is this Bill of Materials is accurate at the time of posting. Please contact a Knight Representative to verify product information.