GMEPPTA9630 (#ARZ86306S) Pneumatic-Electric Handle with Pneumatic Trigger

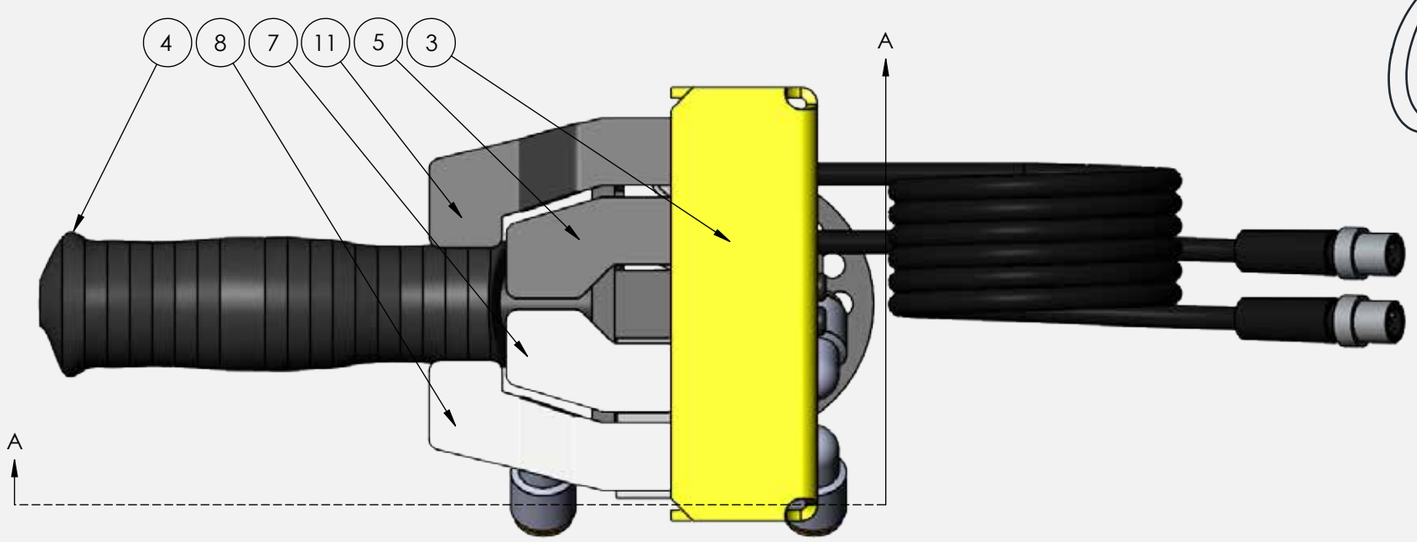

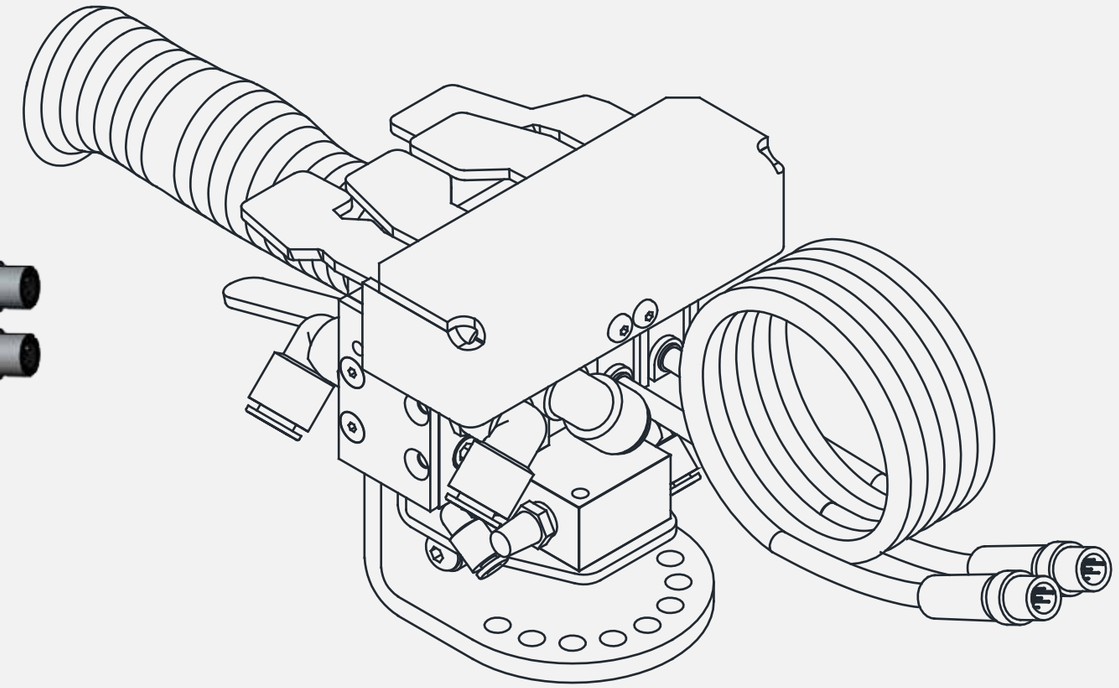

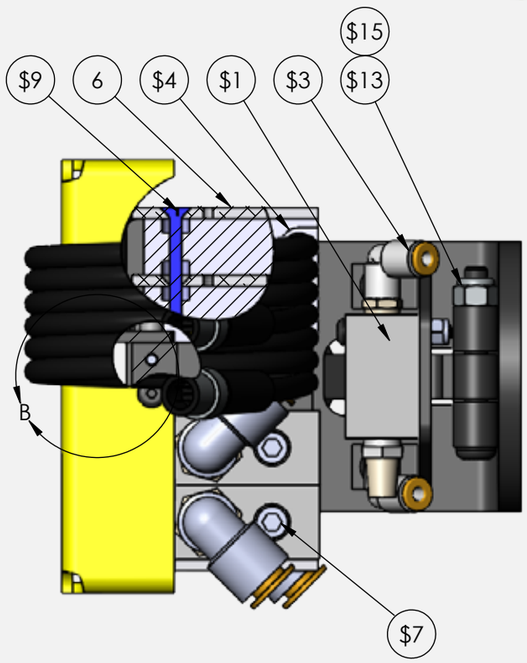

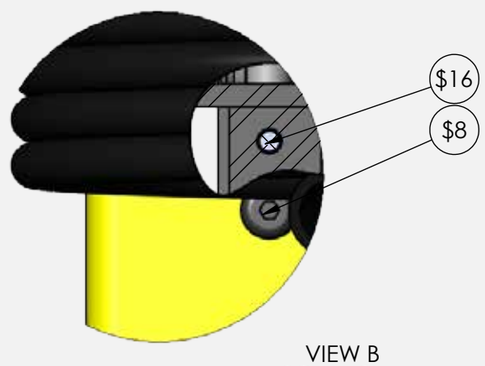

VIEW B
SCALE 2 : 1

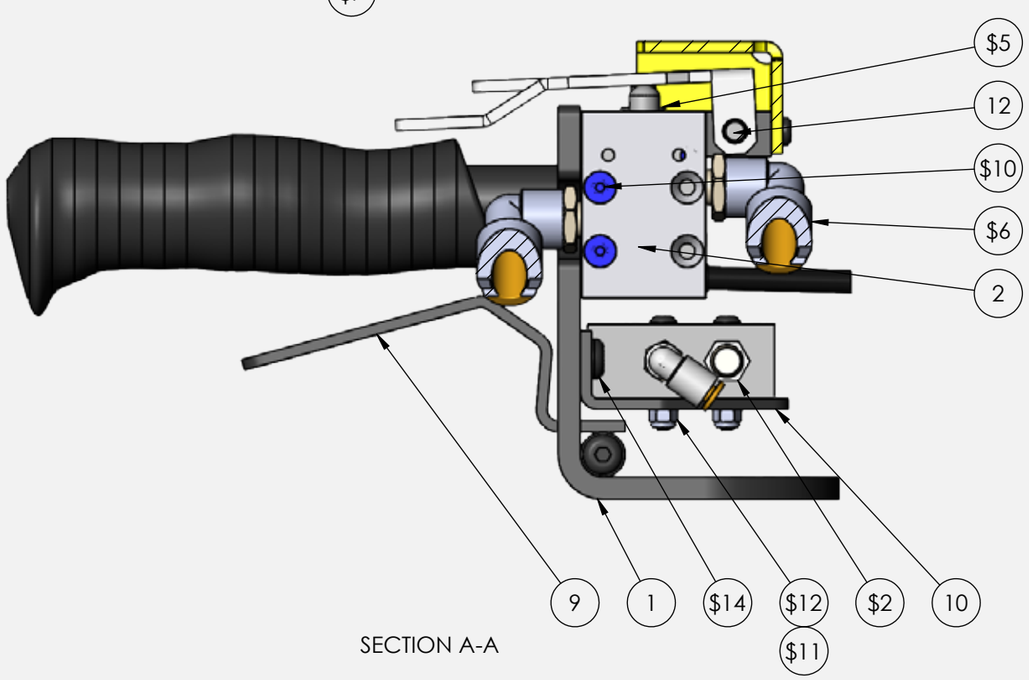

SECTION A-A

Ref #	Qty #		Knight Part #	ARZ Part #	Description
$16	2		9613K14	ARZ86266	5/32" NYLON BALLS
$15	1		1/4-20 X 2" LG	N/A	BHCS
$14	2		1/4-20 X 3/8 LG	N/A	BHCS
$13	1		1/4-20	N/A	NYLOK NUT
$12	2		M4	N/A	NYLOK NUT
$11	2		M4X0.7 x 30	N/A	BHCS
$10	2		#8-32 X 2" LG	N/A	FHCS
$9	2		#8-32 X 1 3/4" LG	N/A	FHCS
$8	2		#8-32 X 3/8 LG	N/A	BHCS
$7	2		1501-2	ARZ86272	BLACK PIPE PLUG 1/8
$6	3		KQ2L10-01S	ARZ86273	MALE ELBOW 10mm OD1/8 NPT
$5	2		ZCE10	ARZ86278	TELEMECANIQUE SWITCH HEAD
$4	2		ZCMD21L1R12SCU	ARZ86279	TELEMECANIQUE 4 PIN SWITCH
$3	2		KQ2L04-01S	ARZ86265	MALE ELBOW 4mm OD1/8 NPT
$2	2		P18	ARZ86264	NEUMATICS MUFFLER 1/8 NPT
$1	3		VM430-F01-00	ARZ86263	SMC VALVE
12	1		GMBPD1113-4.5	ARZ86268	LEVER PIN
11	1		GMBPD1107	ARZ86269	LEFT HAND OUTER LEVER
10	1		GMBPD1109	ARZ86276	TRIGGER VALVE MNT. BRACKET
9	1		GMBPD1108	ARZ86277	TRIGGER LEVER
8	1		GMBPD1106	ARZ86270	RIGHT HAND OUTER LEVER
7	1		GMBPD1104	ARZ86261	RIGHT HAND INNER LEVER
6	2		GMBPD1103	ARZ86280	ELECTRIC BLOCK SPACER
5	1		GMBPD1105	ARZ86267	LEFT HAND INNER LEVER
4	1		BPD1125	ARZ86260	7/8" DIA MOLDED ERGO GRIP
3	1		GMBPD1112	ARZ86271	4 BUTTON GUARD
2	1		GMBPD1102	ARZ86257	PNEUMATIC SPACER
1	1		GMBPD1100	ARZ86256	HANDLE BRACKET

KNIGHT GLOBAL

Information is this Bill of Materials is accurate at the time of posting. Please contact a Knight Representative to verify product information.