GMBPA9340 (#ARZ86225R) Pneumatic Handle

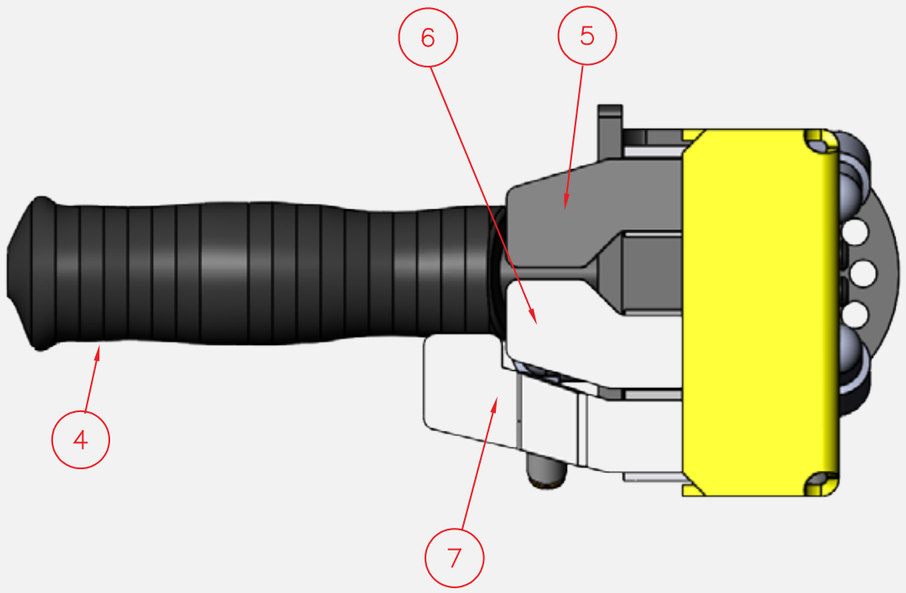

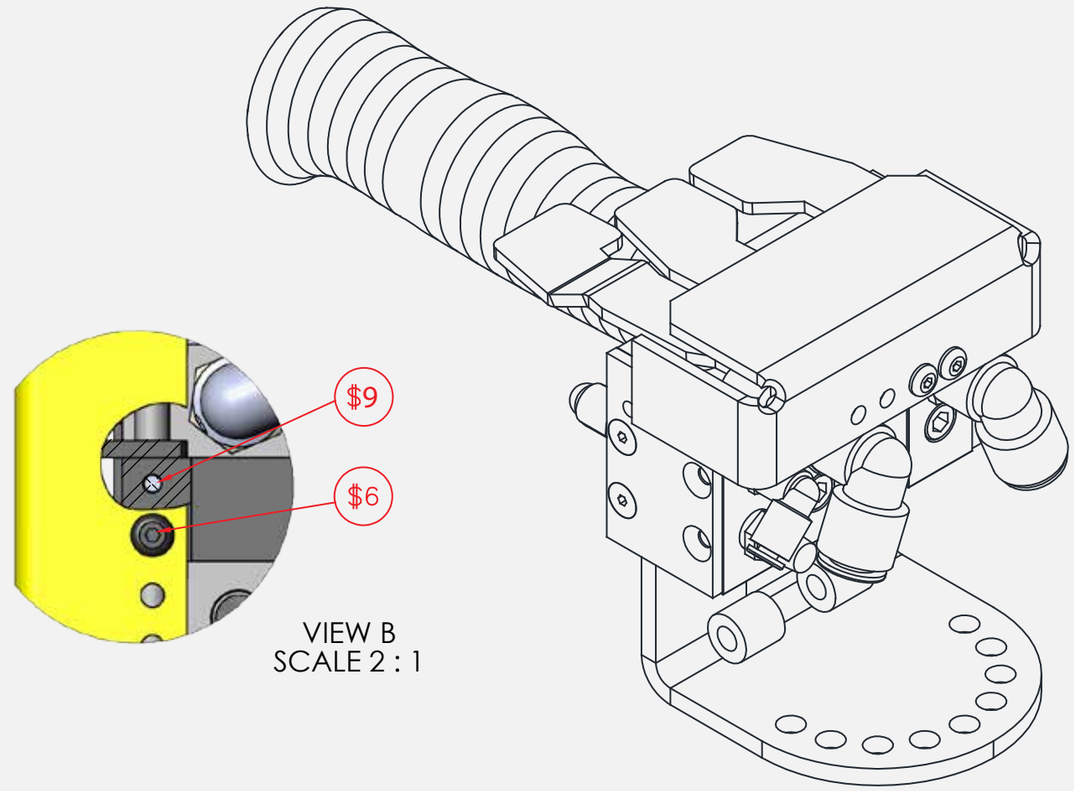

VIEW B
SCALE 2 : 1

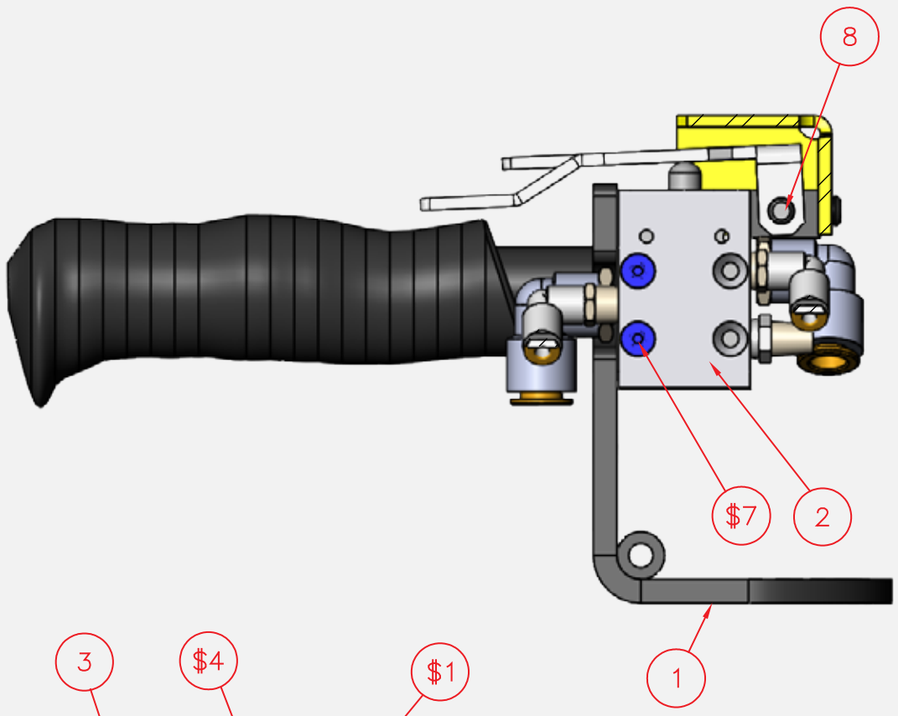

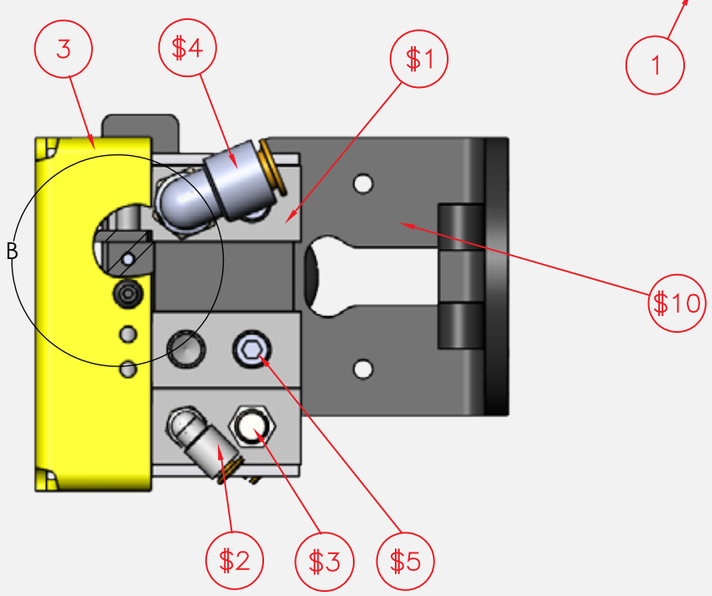

Ref #	Qty #		Knight Part #	ARZ Part #	Description
$9	2		9613K14	ARZ86266	5/32” NYLON BALL
$8	2		#8-32 X 1 1/4” LG	N/A	FHCS
$7	2		#8-32 X 2” LG	N/A	FHCS
$6	2		#8-32 X 3/8 LG	N/A	BHCS
$5	2		1501-2	ARZ86272	BLACK PIPE PLUG
$4	3		KQ2L10-01S	ARZ86273	MALE ELBOW 10mm OD1/8 NPT
$3	2		P18	ARZ86264	NEUMATICS MUFFLER 1/8 NPT
$2	2		KQ2L04-01S	ARZ86265	MALE ELBOW 4mm OD1/8 NPT
$1	3		VM430-F01-00	ARZ86263	SMC VALVE
8	1		GMBPD1113-3.5	ARZ86274	LEVER PIN
7	1		GMBPD1106	ARZ86270	RIGHT HAND OUTER LEVER
6	1		GMBPD1104	ARZ86261	RIGHT HAND INNER LEVER
5	1		GMBPD1105	ARZ86267	LEFT HAND INNER LEVER
4	1		BPD1125	ARZ86260	7/8” DIA MOLDED ERGO GRIP
3	1		GMBPD1111	ARZ86275	3 BUTTON GUARD
2	2		GMBPD1102	ARZ86257	PNEUMATIC SPACER
1	1		GMBPD1100	ARZ86256	HANDLE BRACKET

KNIGHT GLOBAL

Information in this Bill of Materials is accurate at the time of posting. Please contact a Knight Representative to verify product information.