KSAA1048 Servo Load Trolley (RAD4110 Rail)

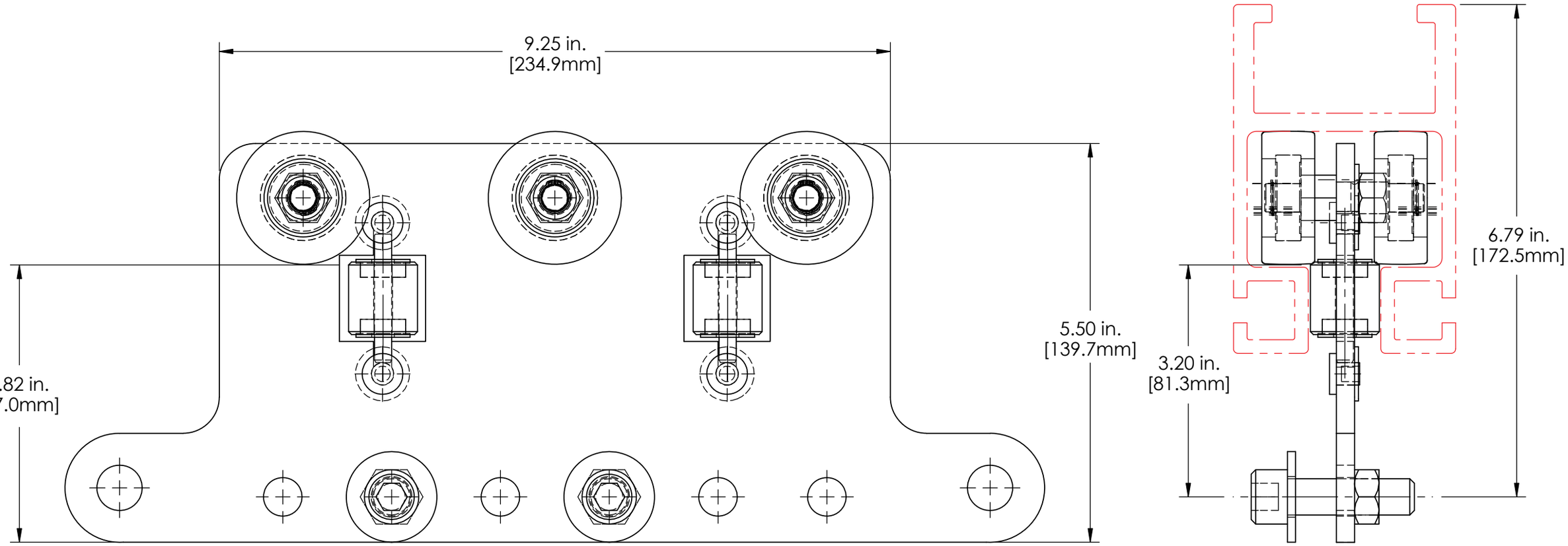

KNIGHT GLOBAL