GMEPA9050 (#ARZ86250R) Electric Control Handle

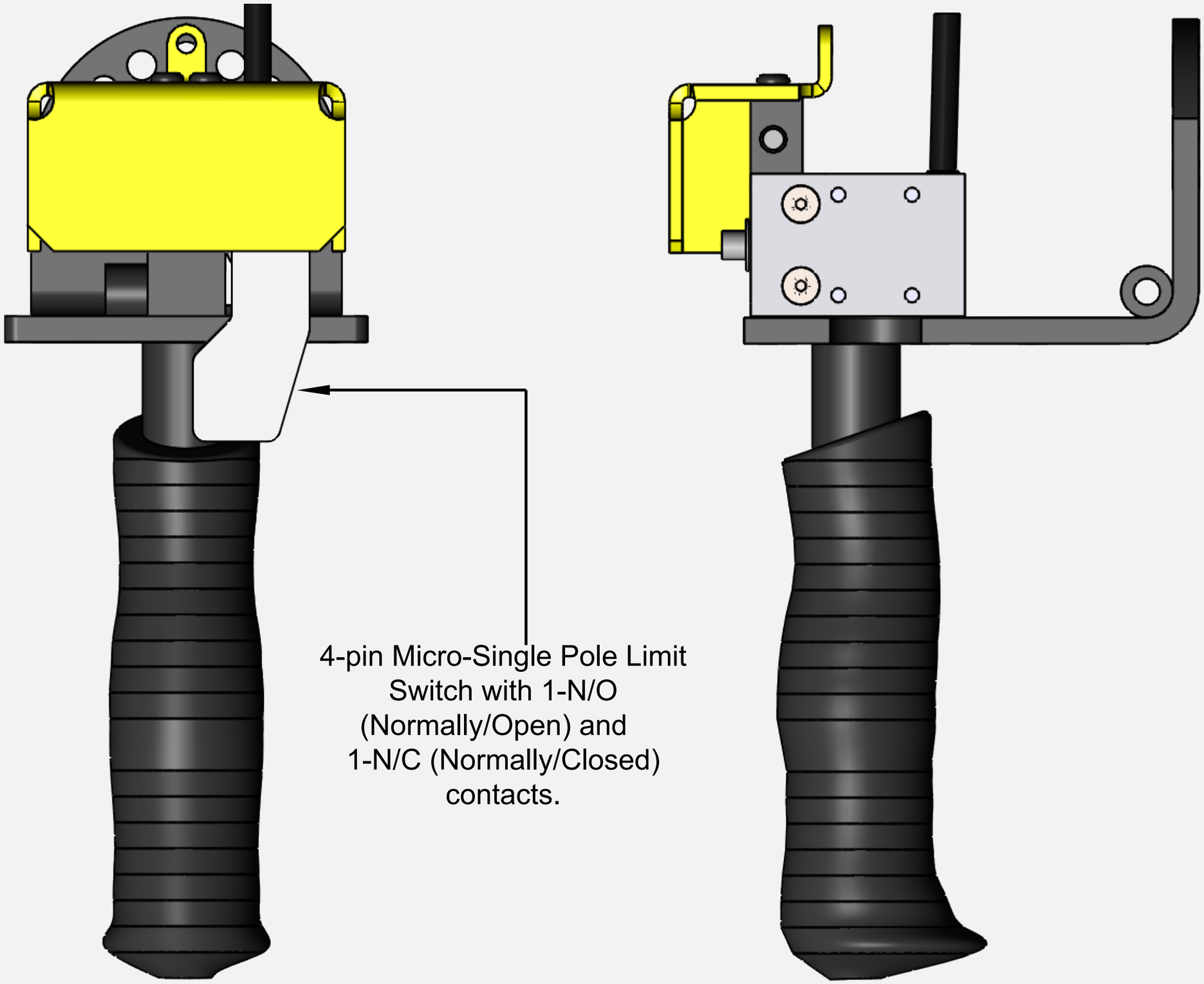

KNIGHT GLOBAL